Bike Flasher – Amazing!

by Colin Mitchell

This bike flasher uses a single transistor to flash two white LEDs from a single cell. And it has **no core** for the transformer - just AIR – so it's very easy to build.

It's a **Joule Thief** circuit - the name was invented by a reader who made a similar circuit and posted it on the **Instructables** website. It's a very good name and has been used for this type of circuit using a small transformer-inverter to drive a LED.

All **Joule Thief** circuits on the web use a ferrite rod or toroid (doughnut) core and the turns are wound on the ferrite material. But this circuit proves the collapsing magnetic flux produces an increased voltage, even when the core is AIR. The fact is this: When a magnetic field collapses quickly, it produces a higher voltage in the opposite direction and in this case the magnetic field surrounding the coil is sufficient to produce the energy we need.

Wind 30 turns on 20mm (1" dia) tube and then another 30 turns on top. Build the first circuit and connect the wires. If the circuit does not work, swap the wires going to the base.

Now add the 10u electrolytic, 100k resistor and another white LED (remove the 1k5 and 22n). The circuit will now flash. You must use 2 LEDs for the flashing circuit.

The secret to getting the maximum energy from the coil (to flash the LEDs) is the maximum amount of air in the centre of the coil. Air cannot transfer a high magnetic flux so we provide a large area (volume) of low flux to provide the energy.

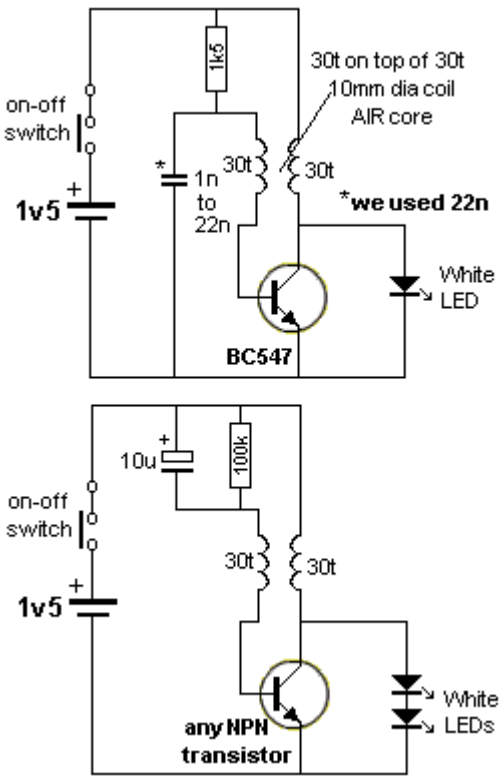

Build the top circuit first then add another white LED, 10u and 100k to produce the flashing effect.

The current for the circuit is 11mA. The two 30-turn windings must be kept together because the flux from the main winding must cut the feedback winding to turn **ON** the transistor **HARD**.

When the transistor starts to turn on via the 100k, it creates magnetic flux in the main winding that cuts the feedback winding and a positive voltage comes out the end connected to the base and a negative voltage comes out the end connected to the 100k and 10u. This turns the transistor ON more and it continues to turn ON until fully turned ON. At this point the magnetic flux is not expanding and the voltage does not appear in the feedback winding.

During this time the 10u has charged and the voltage on the negative lead has dropped to a lower voltage than before. This effectively turns off the transistor and the current in the main winding ceases abruptly. The magnetic flux collapses and produces a voltage in the opposite direction that is higher than the supply and this is why the two LEDs illuminate. This also puts a voltage through the feedback winding that keeps the transistor OFF. When the magnetic flux has collapsed, the voltage on the negative lead of the 10u is so low that the transistor does not turn on. The 100k discharges the 10u and the voltage on the base rises to start the next cycle.

You can see the resistors and all the other parts in the photo as a "birds nest" to allow easy experimenting.

This is the first circuit you should build to flash a white LED from a single cell. It is simple and easy to build.

It covers many features of electronics-understanding and shows how the efficiency of a LED increases when it is pulsed very briefly with a high current.

The two coils form a TRANSFORMER and show how a collapsing magnetic field produces a high voltage. It produces as much as 20v, but the two white LEDs produce a characteristic voltage of about 3.6v each and this reduces the voltage to about 7v.

The 10u and 100k form a delay circuit to produce the flashing effect.

This circuit was designed and perfected using a "birds nest" arrangement to make experimenting easy.

Note: Changing the turns to 40t for the main winding and 20t for the feedback (keeping the turns tightly together with sticky-tape) reduces the current to 8-9mA.

The size of the wire is not important and the diameter of the coil is not critical. You can experiment with a different number of turns and you will be amazed at the brightness of the flash.

More details on these circuits can be found on the website:
http://www.electronicsmaker.info